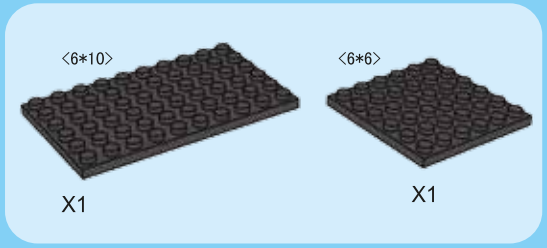

1

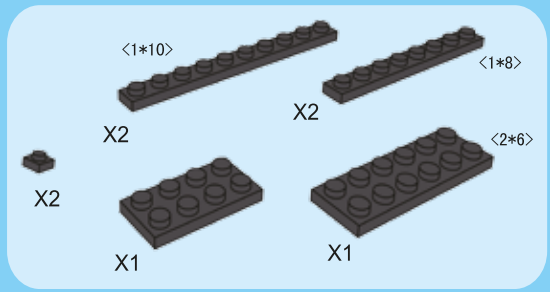

2

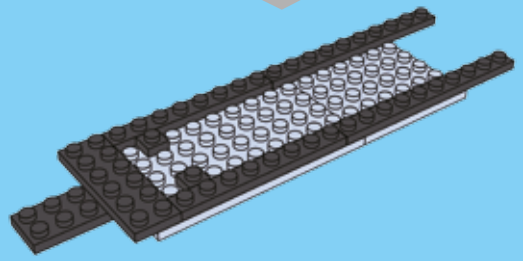

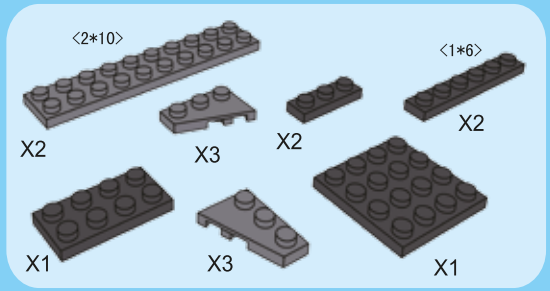

3

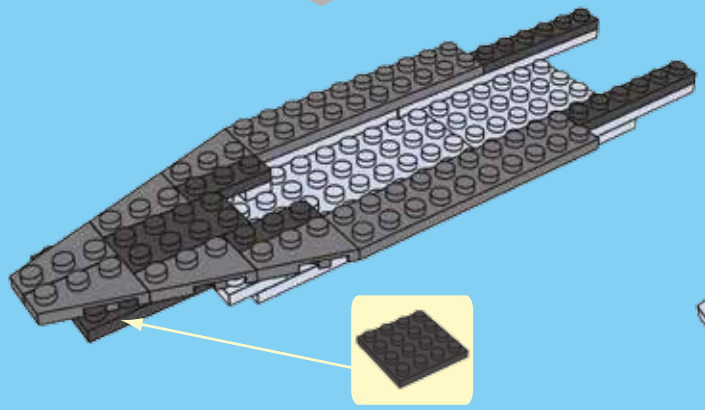

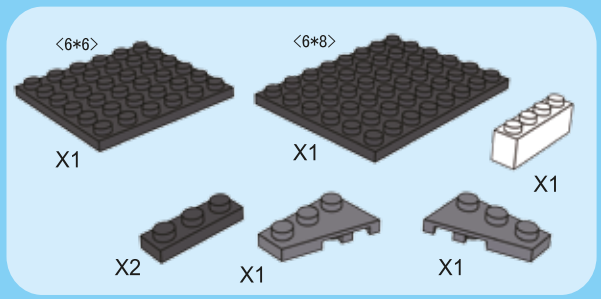

4

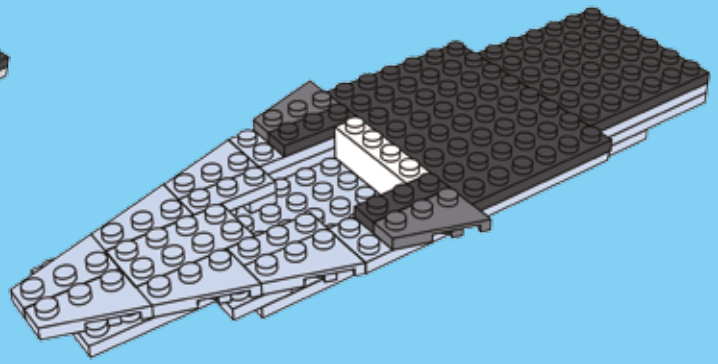

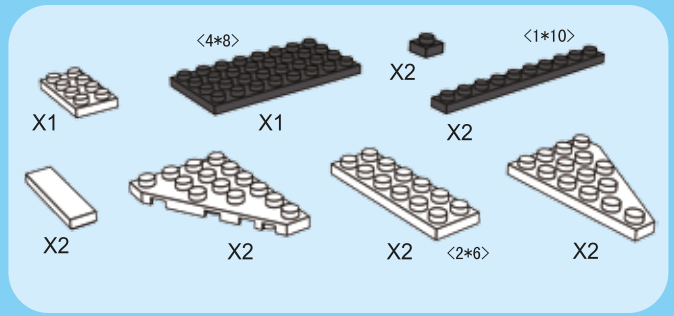

5

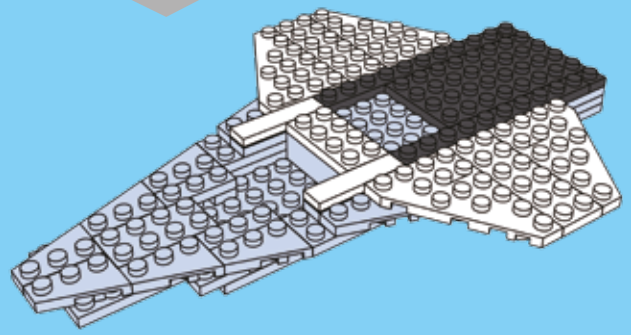

WARNING:
CHOKING HAZARD - small parts.
Not for children under 3 years.

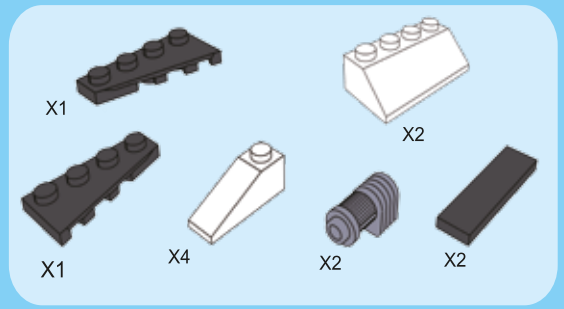
X1
X2
X1
X4
X2
X2

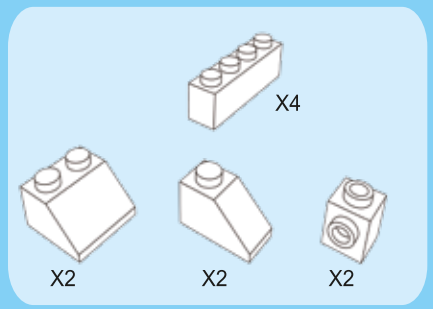
X4
X2
X2
X2

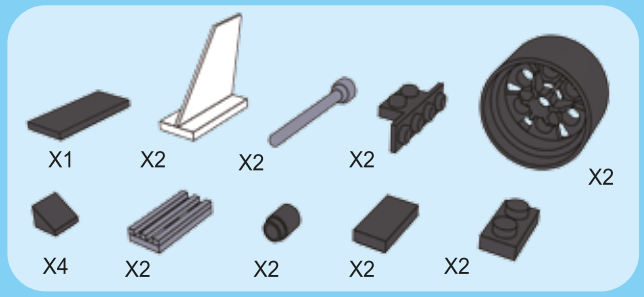
X1
X2
X2
X2
X2
X4
X2
X2
X2
X2

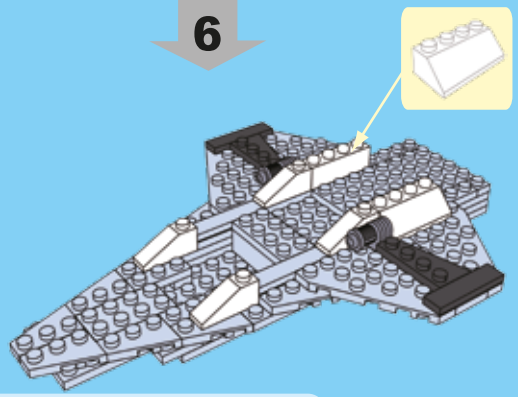
6

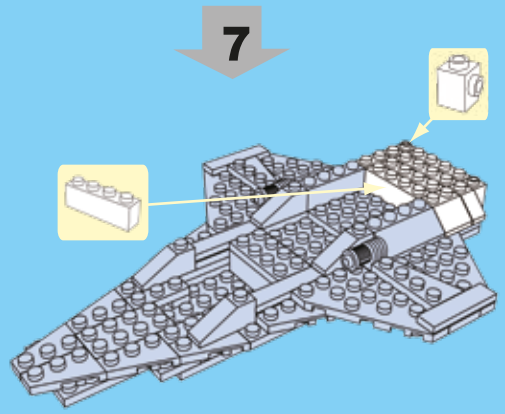
7

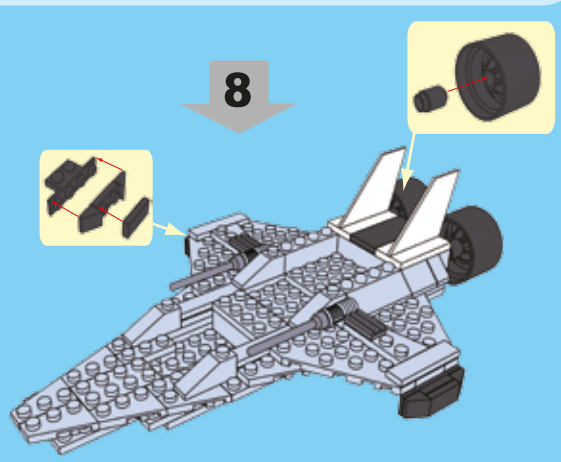
8

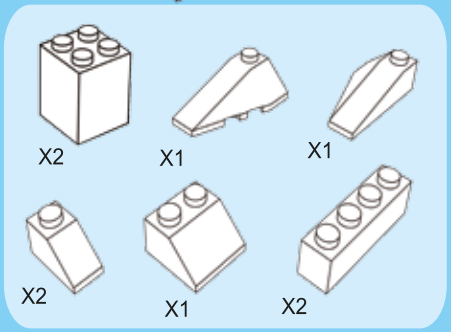
X2
X1
X1
X2
X1
X2

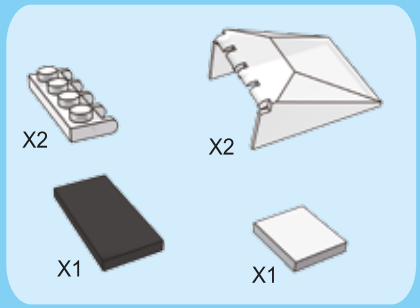
X2
X2
X1
X1

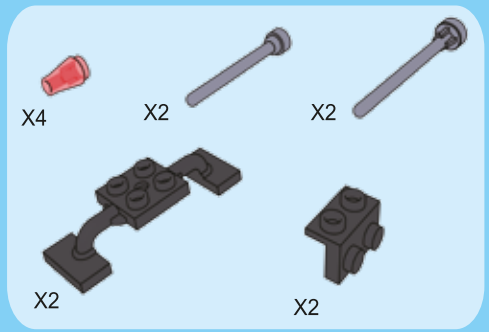
X4
X2
X2
X2
X2

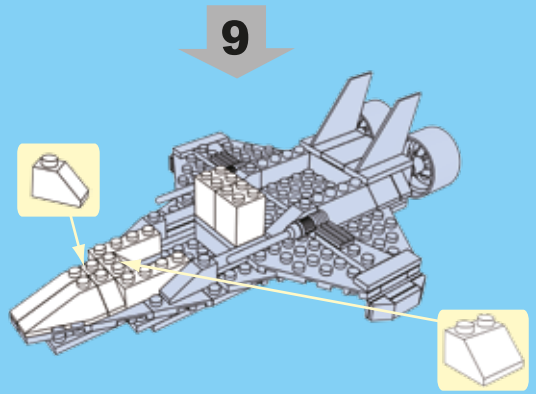
9

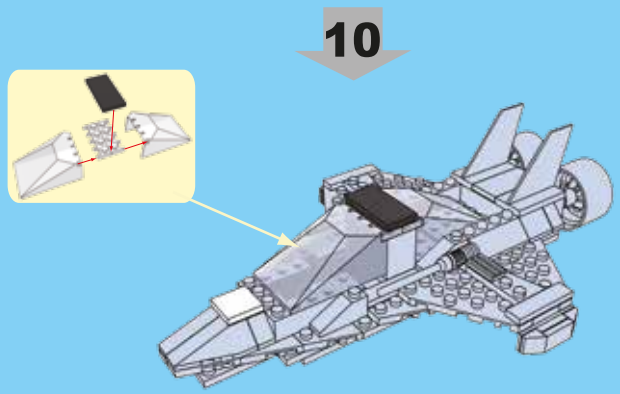
10

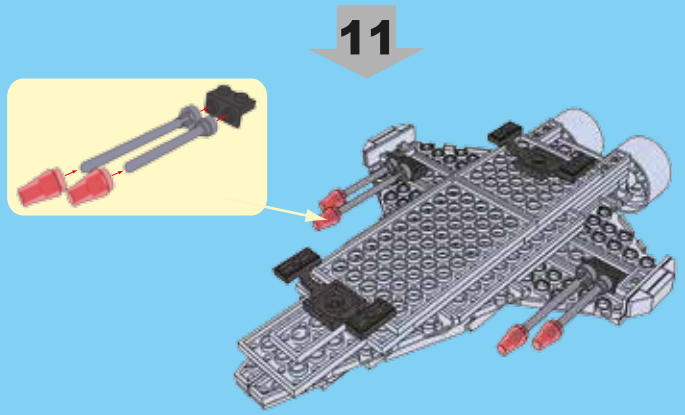
11